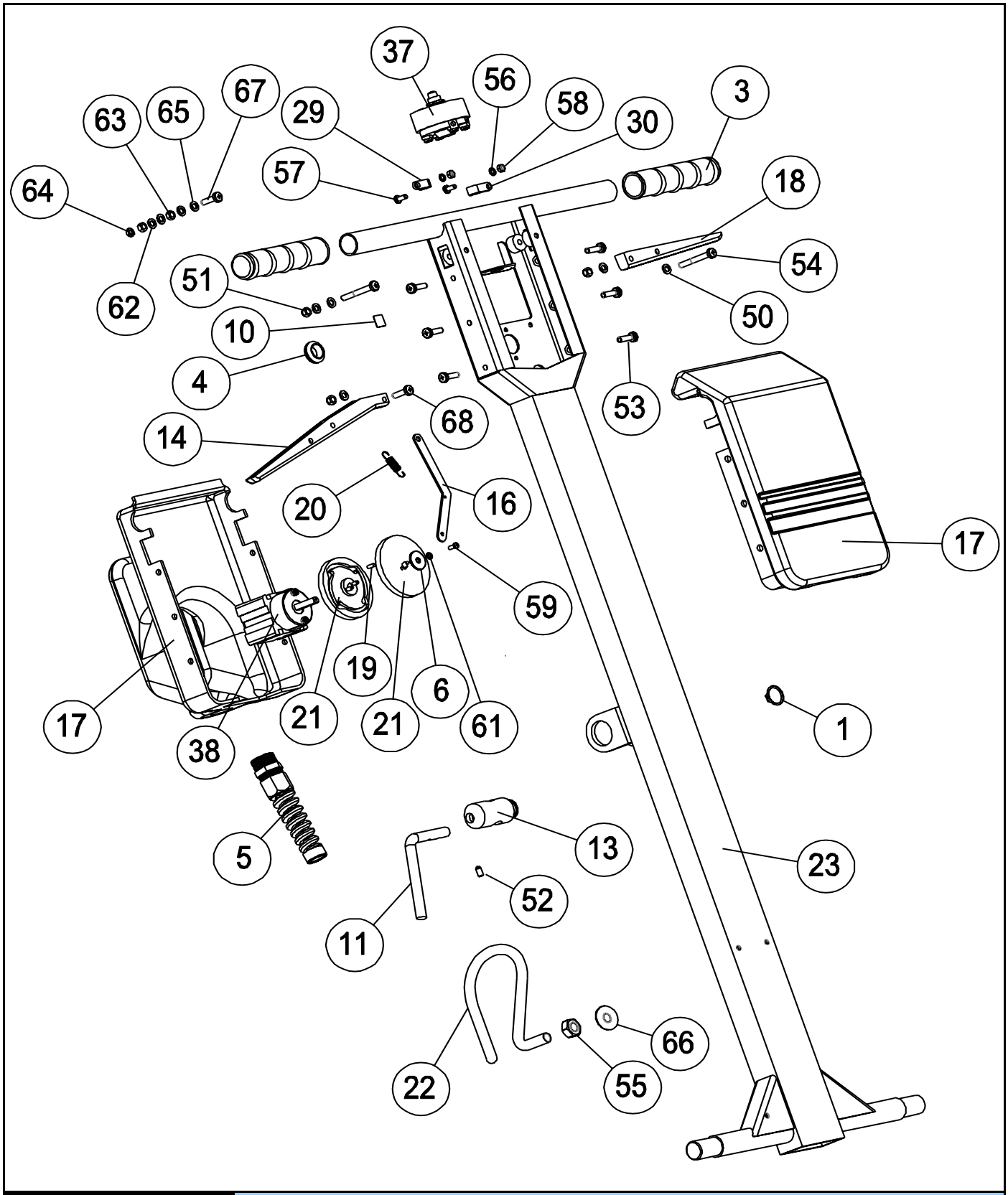

CIMEX	CR48 Handle Assembly		
Drawing Number: 09-1047-0000			
Date:	2/2/2009		
Machine:	CR48		
Reference Parts List:	05-3934-0000		
Modified By:	G SECHERE	DESCRIPTION OF CHANGE	ECN #
Revision:	B	COMPONENTS CHANGE	N/A

CIMEX	CR48 Handle Assembly		
	Part Reference: 05-3934-0000		
Date:	2/2/2009		
Machine:	CR48		
Reference Drawing Number:	09-1047-0000		
Modified By:	G SECHERE	DESCRIPTION OF CHANGE	ECN #
Revision:	B	COMPONENTS CHANGE	N/A

Ref. No.	Part No.	Part Description	Qty
		CORE COMPONENTS	
1	02-3950-0000	3/4 in EXTERNAL CIRCLIP	1
2	02-4065-0000	SLEEVING 2MM CLEAR	4"
3	02-4175-0000	HANDLE GRIP	2
4	02-4176-0000	GROMMET	1
5	02-4186-0000	CABLE GLAND	1
6	02-4311-0000	PENNY WASHER	1
7	02-4149-0000	TYRAP - SMALL (BI) *NOT SOWHN*	7
10	03-6185-0000	EARTH POINT LABEL	1
11	03-6953-0000	LOCKING HANDLE	1
13	03-6957-0000	PIVOT	1
14	03-7281-0000	LEVER	1
16	03-7298-0000	SWITCH CAM LEVER	1
17	03-7300-1000	HANDLE BOX (FRONT & REAR SET)	1
18	03-7301-0000	WATER VALVE LEVER	1
19	03-7433-0000	CAM FOLLOWERS	1
20	03-7434-0000	SPRING	1
21	03-7435-0000	REVERSE SWITCH CAMS	1
22	03-7660-0000	CABLE HOOK	1
23	03-8005-0000	CR / RHD COMMON HANDLE FRAME	1
29	04-0286-0000	P CLIP (DROPLEAD)	1
30	04-0286-0000	P CLIP (MAINS CABLE)	1
31	04-3416-0000	SUPPRESSOR RF 0.47UF	1
33	04-3576-0000	CRIMP TERMINAL PRE-INSULATED *NOT SHOWN*	6
32	04-3480-0000	TERMINAL (FORK) *NOT SHOWN*	2
34	04-3481-0000	TERMINAL (SPRING SPADE) *NOT SHOWN*	4
35	04-3602-0000	TERMINAL (RING) *NOT SHOWN*	2
36	04-3055-0053	MAINS CABLE 1.5MM SQ ORANGE PVC 3 CORE UK PLUG	1
37	04-3686-0000	SWITCH (MOMENTARY)	1
38	04-3809-0000	SWITCH (CAM OPERATED)	1
43	04-3553-0000	CABLE 2.5MM 14AWG BLACK *NOT SHOWN* (DROPLEAD)	174"
44	04-3556-0000	CABLE 2.5MM 14AWG BLUE *NOT SHOWN* (DROPLEAD)	87"
45	04-3558-0000	CABLE 2.5MM 14AWG BROWN *NOT SHOWN* (DROPLEAD)	87"
46	04-3559-0000	CABLE 2.5MM 14AWG GREEN/YELLOW *NOT SHOWN* (DROPLEAD)	87"
47	72470A	HEAT SHRINK TUBING	12"
FASTENERS			
50	00-0500-0503	M5 PLAIN WASHER	6
51	00-0500-0723	M5 NYLOC NUT	3
52	00-0510-0171	M5 x 10 SOCKET SET SCREW	1
53	00-0512-0013	M5 X 12 POZI PAN HEAD SCREW	6
54	00-0540-0013	SCREW, M5 X 40 PAN HEAD	2
55	00-1000-0703	M10 FULL NUT	1
56	00-0400-0523	M4 SHAKEPROOF WASHER	2
57	00-0410-0023	M410 POZI PAN HEAD	2
58	00-0400-0703	M4 FULL NUT	2
59	00-0308-0013	M3x8 POZI PAN HD SCREW	1
61	00-0300-0503	M3 PLAIN WASHER	1
62	00-0500-0507	M5 BRASS WASHER	3
63	00-0500-0703	M5 FULL NUT	2
64	00-0500-0713	M5 LOCK NUT	1
65	00-0500-0521	M5 SHAKEPROOF WASHER Z/P	1
66	00-1000-0523	M10 SHAKEPROOF WASHER	1
67	00-0520-0013	M5x20 POZI PAN HD SCREW	1
68	00-0518-0013	M5 X 12 POZI PAN HEAD SCREW	1

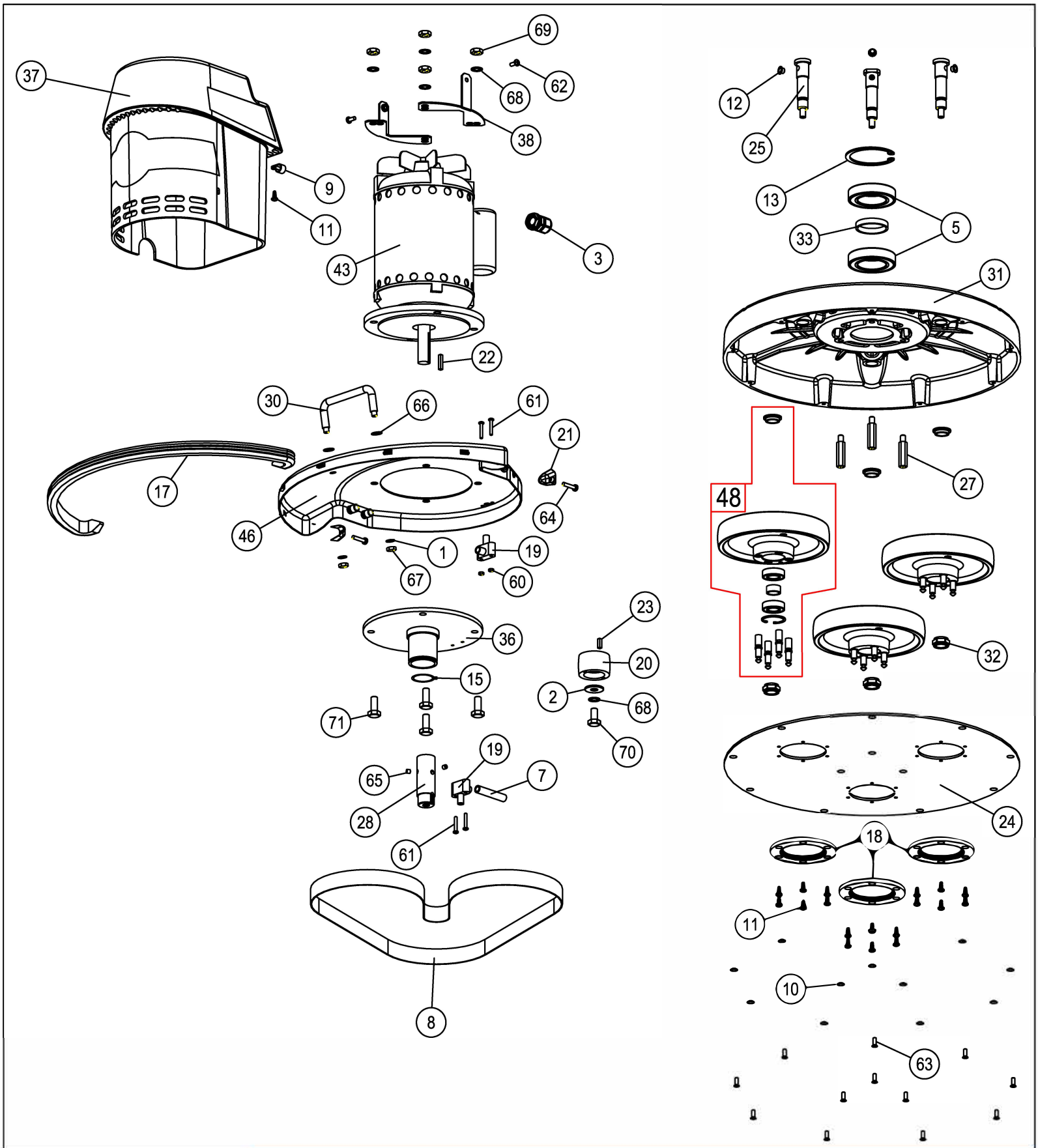

CIMEX

CR48 Head Assembly

DRAWING NO.: 09-1062-0000

MACHINE:	CR48
REF. PARTS LIST:	05-3938-0000
SERIES:	B

REVISION	ECN #	DESCRIPTION OF CHANGE	MOD. BY	DATE
A	0279	CHANGED MOTOR TO LEMAC; MOTOR COVER TO 03-8230-0000	G.S.	2/15/2010

CIMEX	CR48 Head Assembly		
Part Reference: 05-3938-0000			
Date:	2/2/2009		
Machine:	CR48		
Reference Drawing Number:	09-1062-0000		
Modified By:	G SECHERE	DESCRIPTION OF CHANGE	ECN #
Revision:	B	COMPONENTS CHANGE	N/A

Ref. No.	Part No.	Part Description	Qty
		CORE COMPONENTS	
2	02-4335-0000	M10x30 WASHER	1
3	02-3965-0000	CABLE GLAND	1
4	02-4379-0000	M10 STEEL RIVNUT TPP30 *NOT SHOWN*	4
5	02-4020-0000	BEARING 6009-2RS	2
7	02-4179-0000	WATER FEED TUBE	1.75"
8	02-4191-0000	BELT - NITTA 1465x25 (BLUE POLY)	1
9	02-4279-0000	P CLIP(HEYCO 350-3364)	1
10	02-4320-0000	BRASS CUP WASHER No8	12
11	02-4323-0000	SELF TAP No10x12 POZI PAN HD ST/ST	19
12	02-4381-0000	PLASTIC INSERT (REF 12157)	3
13	02-4380-0000	CIRCLIP INTERNAL 1300 - 75mm	1
15	02-4024-0000	CIRCLIP EXTERNAL	1
17	03-6898-1000	BUMPER STRIP	28.5"
18	03-6910-0000	DUST SEAL	3
19	03-6920-0000	WATER FEED ELBOW	2
20	03-6927-0000	MOTOR PULLEY NOM DIA 50mm	1
21	03-6928-0000	BUMPER RUBBER CLIP	2
22	03-6930-0000	KEY 3/16 x 3/16 x 25mm	1
23	03-6931-0000	KEY 3/16 x 3116 x 5/8	1
24	03-6940-0000	BOTTOM COVER PLATE	1
25	03-6944-0000	BRUSH SPINDLE (BRASS - WATER FEED)	3
27	03-6946-0000	BOTTOM COVER SPACER	3
28	03-6947-0000	MOTOR SHAFT EXTENSION	1
30	03-6951-0000	LIFTING HANDLE	1
31	03-6962-0000	EDU BOWL (BLUE) CR48	1
32	03-7220-0000	MI6 NYLOC NUT (M'C'D)	3
33	03-7284-0000	CENTRE BEARING SPACER	1
36	03-7324-0000	SPIGOT PLATE	1
37	03-7657-0000	CR 48/61 MOTOR COVER	1
38	03-7833-0000	MOTOR COVER BRACKET	2
39	03-7654-0000	DECAL - FRONT BARS *NOT SHOWN*	1
40	03-7655-0000	DECAL - FRONT BADGE *NOT SHOWN*	1
41	03-7685-0000	DECAL - SIDE R48 (LEFT & RIGHT HAND PAIR) *NOT SHOWN*	1
42	03-7944-0000	DECAL - CIMEX FROM TRUVOX *NOT SHOWN*	1
43	04-3485-0000	MOTOR 230V 50Hz 550W 4 POLE	1
44	04-3602-0000	#10 16-14 INSULATED RING TERMINAL *NOT SHOWN*	5
45	72470A	HEAT SHRINK BLACK	12"
46	03-7325-0000	BUMPER SHIELD ASSEMBLY CR48	1
48	05-4545-0000	CR48 BRUSH PULLEY ASSEMBLY	3
		FASTENERS	
60	00-0400-0707	M4 BRASS NUT	2
61	00-0425-0023	M425 POZI PAN HD SCREW ST/ST	4
62	00-0512-0013	M5x12 POZI PAN HD SCREW ST/ST	2
63	00-0512-0033	M5x12 COUNTERSUNK SCREW ST/ST	12
64	00-0525-0013	M5x25 POZI PAN HD SCREW ST/ST	2
65	00-0606-0171	M6x6 GRUB SCREW SOCKET HD	2
66	X8218+	WASHER SAE 5/16 SAE FLAT ZINC	2
67	00-0800-0713	M8 1/2 NUT S/S	2
68	00-1000-0523	MI 0 INTERNAL SHAKEPROOF WASHER	5
69	00-1000-0703	MI 0 LOCK NUT S/S	4
70	00-1020-0123	MI 0x20 BOLT S/S	1
71	00-1025-0111	M10x25 BOLT Z/P	4

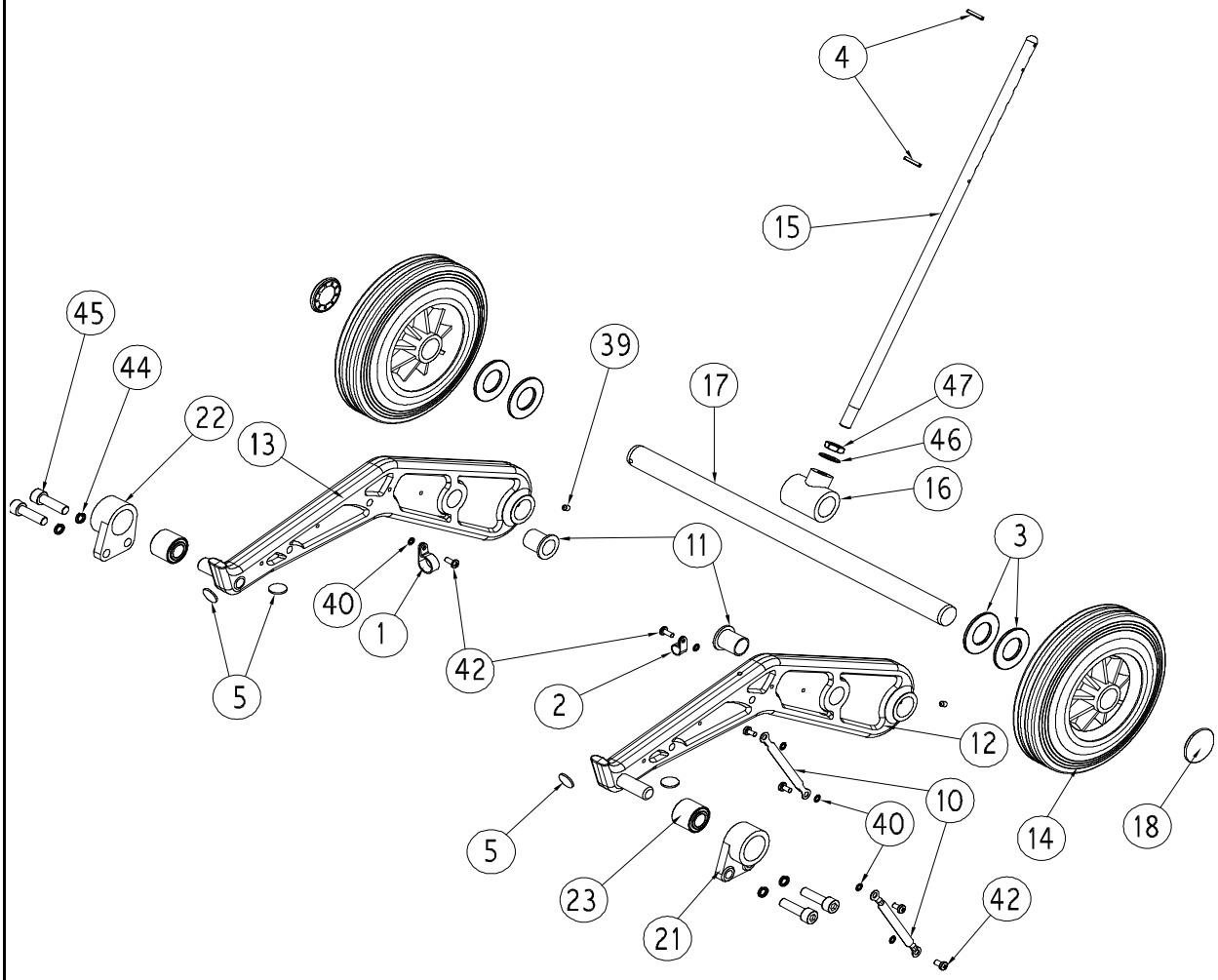

CIMEX

CR48 Chassis Assembly

Drawing Number: 09-1063-0000

Date:	12/29/2009		
Machine:	CR48		
Reference Parts List:	05-4478-0000		
Modified By:	G SECHERE	DESCRIPTION OF CHANGE	ECN #
Revision:	C	ADDED SET SCREWS (#39)	0134

CIMEX	CR48 Chassis Assembly		
Part Reference: 05-4478-0000			
Date:	12/29/2009		
Machine:	CR48		
Reference Drawing Number:	09-1063-0000		
Modified By:	G SECHERE	DESCRIPTION OF CHANGE	ECN #
Revision:	C	ADDED SET SCREWS (#39)	0134

Ref. No.	Part No.	Part Description	Qty
		CORE COMPONENTS	
1	02-4448-0000	P CLIP (CONDUIT)	1
2	02-4279-0000	P CLIP (WATER HOSE)	1
3	02-4363-0000	WASHER (USED AS WHEEL SPACER SUBJECT TO QTY CHANGE)	4
4	02-4208-0000	SELLOCK PIN 1/8x7/8	2
5	02-4187-0000	BUFFER RUBBER 19mm x 1.5mm	4
10	03-6899-0000	EARTH LEAD (WITH INTEGRAL TERMS)	2
11	03-6919-0000	FORK HANDLE BUSH (BLACK)	2
12	03-8175-0000	LIFTING FORK (L/H)	1
13	03-8176-0000	LIFTING FORK (R/H)	1
14	03-7277-0000	WHEEL 200mm DIA	2
15	03-7279-0000	SWIVEL CLAMP ROD	1
16	03-7306-0000	TEE PIECE	1
17	03-7308-0000	AXLE - CR48,CR61	1
18	03-7658-0000	STARLOCK HUB CAP	2
20	04-3688-0000	20mm CONDUIT *NOT SHOWN*	43"
21	03-6926-0000	PIVOT BLOCK (L/H)	1
22	03-6925-0000	PIVOT BLOCK (R/H)	1
23	03-6929-0000	SILENT BEARING	2
		FASTENERS	
39	00-0606-0171	M6 X 6 SKT SET SCREW S/COL	2
40	00-0500-0521	M5 INTERNAL SHAKEPROOF WASHER	6
42	00-0512-0013	M5x10 POZI PAN HEAD SCREW ST/ST	6
44	7CL003	M10 SPRING WASHER ST/ST	4
45	00-1030-0103	M10x30 CAP HD SCREW ST/ST	4
46	00-1200-0503	M12 WASHER FORM B ST/ST	1
47	00-1200-0713	M12 LOCKNUT ST/ST	1

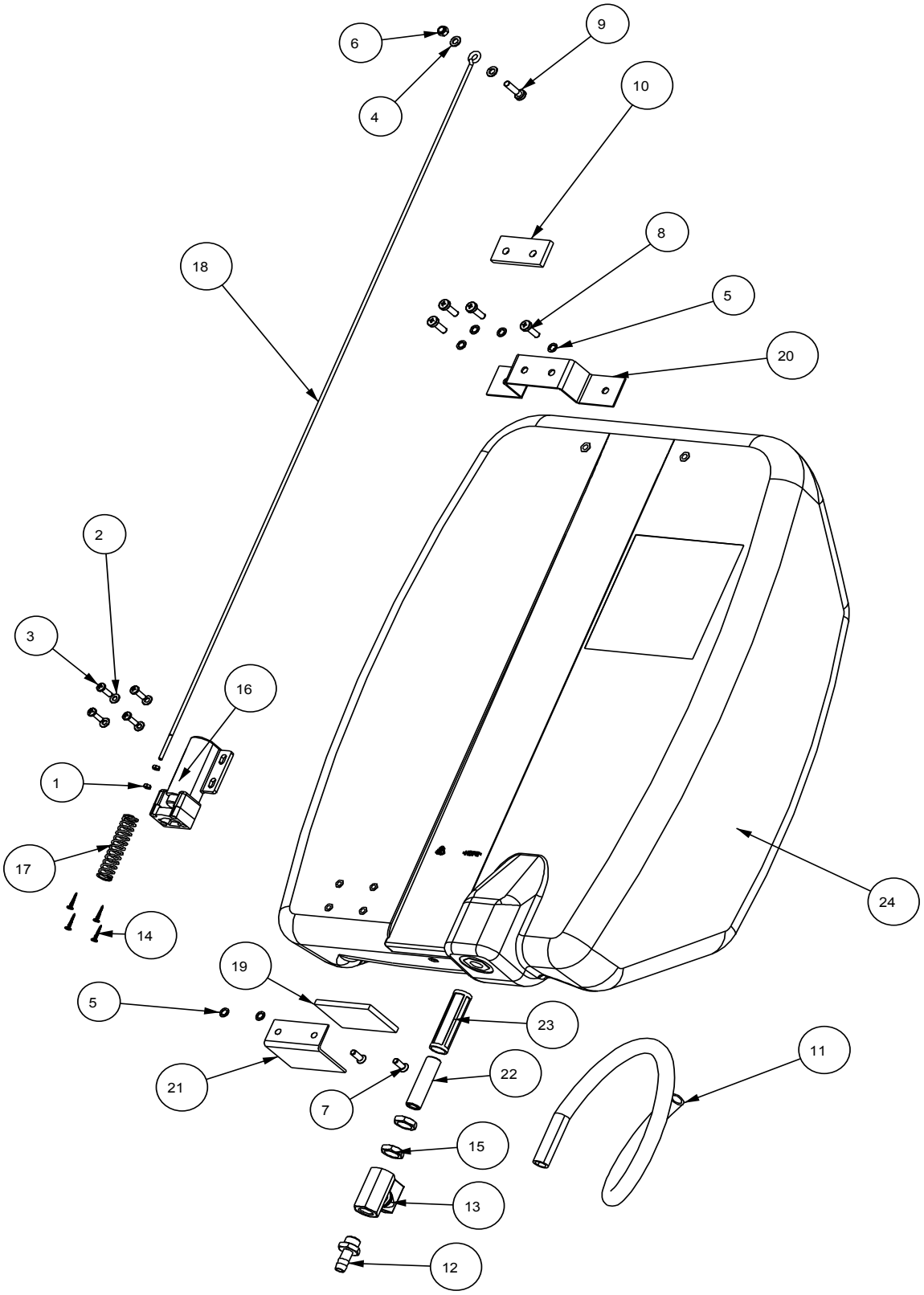

CIMEX

Cyclone Range Tank Assembly

Drawing Number: N/A

Date:	9/10/2009		
Machine:	CYCLONE RANGE MACHINES		
Reference Parts List:	05-4253-0000		
Modified By:	G SECHERE	DESCRIPTION OF CHANGE	ECN #
Revision:	**C**	INCREASED QTY OF #5 TO 6 & #8 TO 4	0135

CIMEX	Cyclone Range Tank Assembly		
Part Reference: 05-4253-0000			
Date:	9/10/2009		
Machine:	CYCLONE RANGE MACHINES		
Reference Drawing Number:	N/A		
Modified By:	G SECHERE	DESCRIPTION OF CHANGE	ECN #
Revision:	**C**	INCREASE QTY OF #5 TO 6 & #8 TO 4	0135

Ref. No.	Part No.	Part Description	Qty
		CORE COMPONENTS	
10	02-3278-0000	NEOPRENE ADHESIVE STRIP	4"
11	02-4179-0000	SILICON HOSE (CR TANK) 1.6M	63"
12	02-4212-0000	WATER OUTLET BRASS NICKEL	1
13	02-4213-0000	BALL VALVE	1
14	02-4360-0000	SCREW SELF TAPPER	4
15	03-3475-0000	1/4 INCH BRASS HEXNUT	2
16	03-7297-0000	WATER VALVE (BLUE)	1
17	03-7302-0000	SPRING LEE LC 0594 MWTO SPEC.ISS 01	1
18	03-7303-0000	SOLUTION TANK ROD	1
19	03-7304-0000	FOAM HANDLE PAD	1
20	03-7311-0000	TANK BRACKET TOP	1
21	03-7312-0000	SOLUTION TANK BRACKET LOWER	1
22	03-7661-0000	VALVEINSERT	1
23	03-7662-0000	FILTER (NYLON)	1
24	03-8178-0000	CR RANGE SOLUTION TANK	1
		FASTENERS	
1	00-0300-0703	M3 FULL NUT ST/ST	2
2	00-0400-0503	M4 WASHER FORM 'A' ST/ST	4
3	00-0412-0013	M4 X 12 POZI PAN HEAD SCREW ST/ST	4
4	00-0500-0503	M5 WASHER FORM A ST/ST	2
5	00-0500-0521	M5 INTERNAL SHAKEPROOF	6
6	00-0500-0723	M5 NYLOC NUT ST/ST	1
7	00-0512-0033	M5 x 12 COUNTERSUNK SCREW ST/ST	2
8	00-0516-0013	M5 x 16mm POZI PAN HD SCREW ST/ST	4
9	00-0520-0013	M5 x 20 POZI PAN SCREW ST/ST	1

PART NUMBER 09-1124-0000

0.47uF SUPPRESSOR NOT FITTED
TO USA VERSION.
110V 60Hz

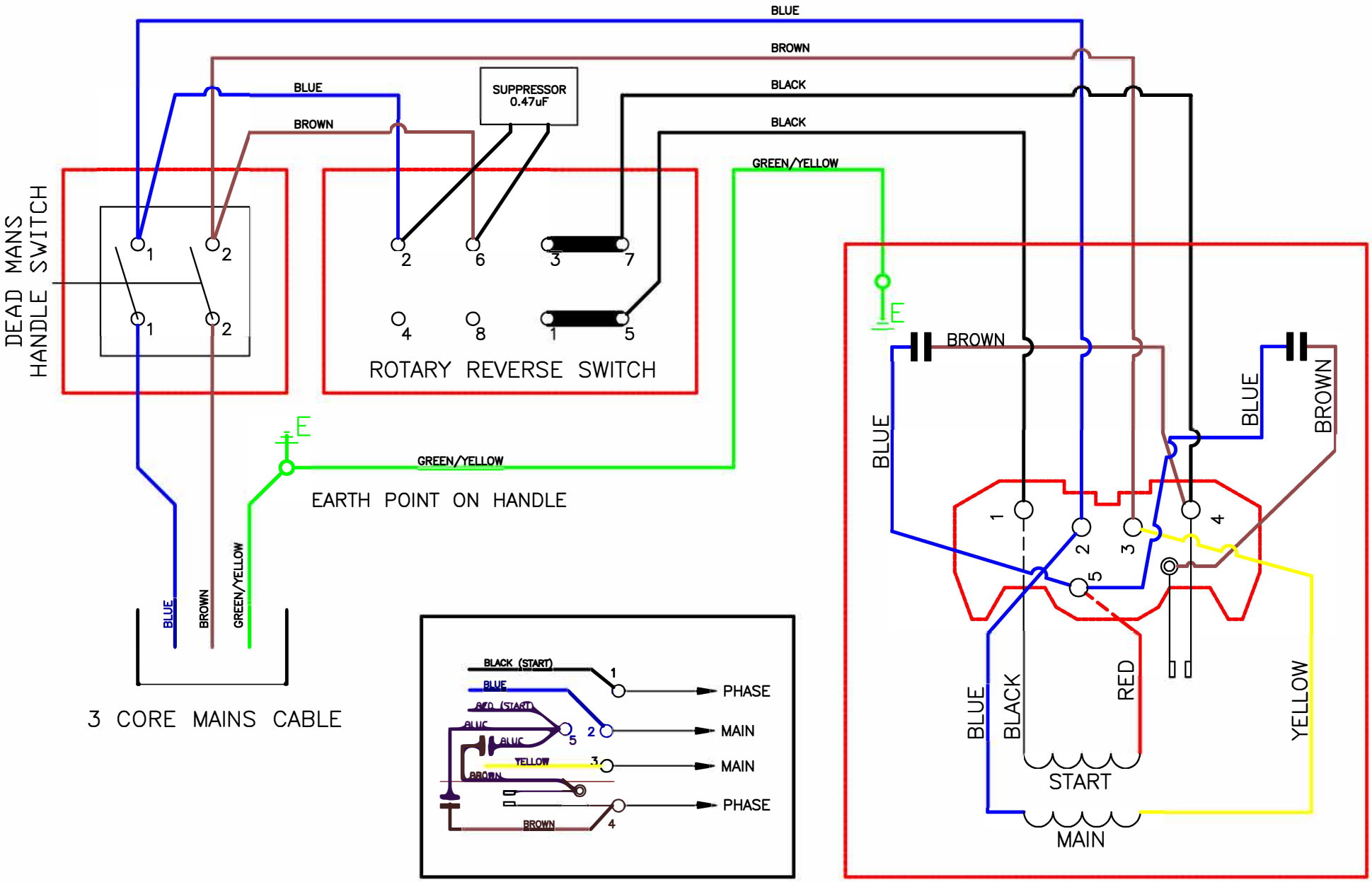

REV	DATE	ECN	DESCRIPTION	BY
-	-	-	-	-
-	-	-	-	-
A	3/18/10	0279	NEW DRAWING	GS

MATERIAL -
FINISH -
DWN GS
DATE 3/18/10
SCALE -
SHEET -

X.X ±0.02 IN RADII X.X ±0.02 IN
X.XX ±0.01 IN X.XX ±0.02 IN
X.XXX ±0.005 IN COMMON ℄ CONCENTRIC TO 0.002 IN
X.XXXX ±0.0005 IN
ANGLES ±0°30'
BREAK SHARP EDGES TO ▮▮10

TACONY CORPORATION CLAIMS PROPRIETARY RIGHTS IN THE MATERIAL DISCLOSED HEREIN. THIS DRAWING IS ISSUED FOR ENGINEERING INFORMATION ONLY. IT MAY NOT BE REPRODUCED, NOR MAY THE INFORMATION HEREIN BE USED FOR MANUFACTURING PURPOSES WITHOUT WRITTEN PERMISSION FROM TACONY CORP.

CIMEX Get the Advantage™
210 Southwest Ave.
Tallmadge, OH 44278

DESCRIPTION (CIMEX) WIRING DIAGRAM DMH SWITCH

A PART NUMBER 09-1124-0000 REV A